# Electric Chain Hoist LIFTKET ERGOKET 80 – 250 kg

**Product information**



This electric chain hoist is ideal for daily use in industrial and workshop environments. With the newly developed manipulator, lifting and lowering loads is made safer, more comfortable and easier on the body. This hoist offers safe and efficient load handling with one-hand operation.

**Features:**

- Power supply 380 – 415 V, 50 Hz
- Protection class IP55
- WLL from 80 kg to 250 kg
- Incl. 3,5 m lifting height
- Ergoket manipulator and high-end spiral cable
- EASY CONNECT at the upper spiral cable
- With 24 VAC control
- Electric limit switches for lifting and lowering
- For both right- and left-handed users
- Manipulator

... *Read more*

**Marking:** CE-mark
**Note:** Standard version delivered with lifting eye (connection between crane and trolley). Alternatively, it comes with a suspension hook.

**CERTEX Danmark A/S**
info@certex.dk
+45 74 54 14 37

© November 2026 - All Rights Reserved

CERTEX | Lifting Solutions Group
Axel Johnson International

# Electric Chain Hoist LIFTKET ERGOKET 80 – 250 kg

## Blueprint

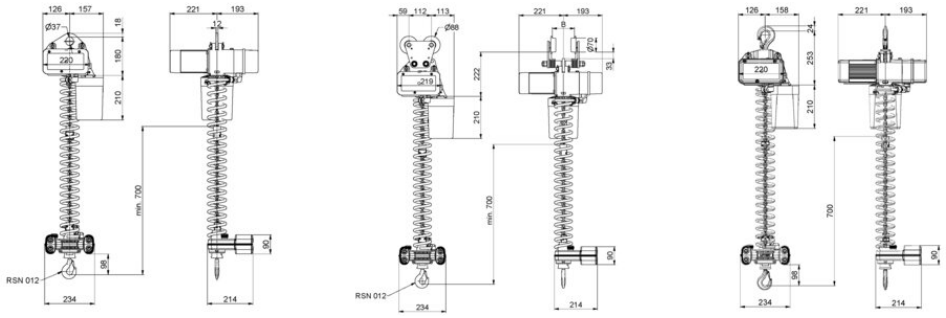

## Technical data

| Part code | Code | WLL ton | Lifting height m | Lifting speed m/min | Number of falls | Class ISO/FEM | Load chain mm | Weight kg |
|---|---|---|---|---|---|---|---|---|
| 54010001147074 | 80/1-8/2 | 0.08 | 3.5 | 8 | 1 | M7 / 4m | 5.2x15 | 37.2 |
| 54010001147079 | 125/1-8/2 | 0.125 | 3.5 | 8 | 1 | M7 / 4m | 5.2x15 | 37.2 |
| 54010003147074 | 250/1-8/2 | 0.25 | 3.5 | 8 | 1 | M6 / 3m | 5.2x15 | 37.2 |

**CERTEX Danmark A/S**
info@certex.dk
+45 74 54 14 37

© November 2026 - All Rights Reserved