Lifting Solutions Group
Axel Johnson International

Sheave Block, Single Stainless

Product information

Sheave block, single with swivel-eye.

... *Read more*



Material: AISI 316.

CERTEX Danmark A/S
info@certex.dk
+45 74 54 14 37

© November 2026 - All Rights Reserved

Lifting Solutions Group
Axel Johnson International

Sheave Block, Single Stainless

Blueprint

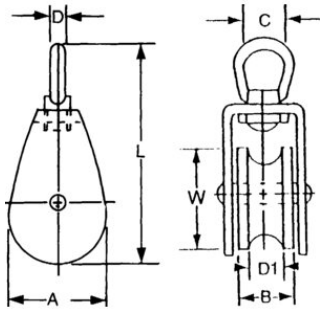

Technical data

Part code	Breaking Load ton	Rope Ø range mm	A mm	B mm	C mm	D mm	D1 mm	L mm	W mm
494104030025	2	12	30	24	14	6	12	83	25
494104030032	2.3	12	36	24	14	6	12	96	32
494104030050	3.4	15	54	28	20	8	15	130	50

CERTEX Danmark A/S
info@certex.dk
+45 74 54 14 37

© November 2026 - All Rights Reserved