Protective Cover Liftket

Product information



LIFTKET protection cover protects electric chain hoist and also the chain box with the chain inside perfectly from weather influences such as sun, rain or wind. Thanks to the velcro fastener, assembly and disassembly are super easy. Chain hoists in climbing position and in standard position can be operated with the cover. Available in 2 different sizes.

... *Read more*

Material: High-quality, heavy-duty material

CERTEX Danmark A/S
info@certex.dk
+45 74 54 14 37

© November 2026 - All Rights Reserved

Lifting Solutions Group
Axel Johnson International

Protective Cover Liftket

Blueprint

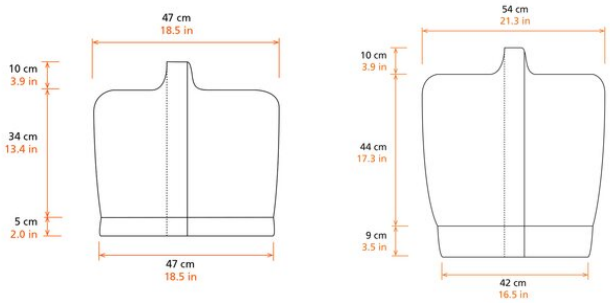

Technical data

Part code	Size	For hoist
5497770000300012	L	MODEL 05 and 07
5497770000300014	S	MODEL 02 and 03
5497770000300016	XL	MODEL 09 and 11

CERTEX Danmark A/S
info@certex.dk
+45 74 54 14 37

© November 2026 - All Rights Reserved